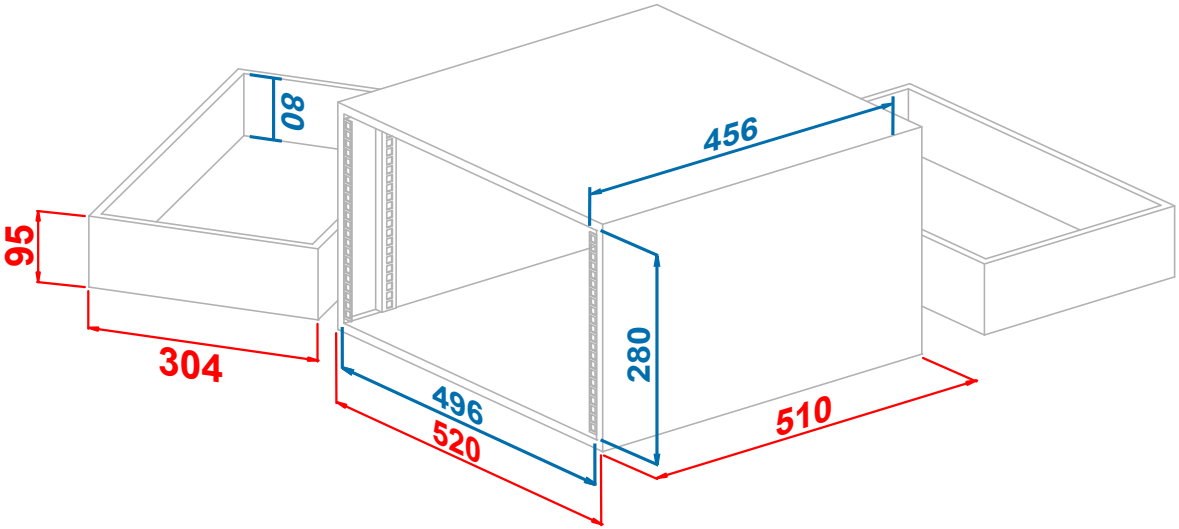

Product Details
Brand: eLumen8
Product name: 6U Rack Flight Case
Order code: ELUM346